UNIVERSITI TUN HUSSEIN ONN MALAYSIA

FINAL EXAMINATION
SEMESTER 2
SESSION 2017/2018

COURSE NAME	:	MICROCONTROLLER
COURSE CODE	:	DAE 32203
PROGRAMME CODE	:	DAE
EXAMINATION DATE	:	JUNE/JULY 2018
DURATION	:	2 HOURS 30 MINUTES
INSTRUCTION	:	ANSWER **ALL** QUESTIONS IN PART A AND **ONE (1)** QUESTION IN PART B.

THIS QUESTION PAPER CONSISTS OF **EIGHT (8)** PAGES

PART A

Q1 (a) A Software Development Method (SDM) in software engineering is a framework that is used to structure, plan, and control the process of developing an information system.

(i) List down the two process models of SDM.

(2 marks)

(ii) Ilustrate the block diagram for the two process models to support your answer in **Q1(a)(i)**.

(6 marks)

(b) The architecture of a microcontroller may require that variables and constants be stored in different types of memory.

(i) Define EEPROM?

(1 mark)

(ii) Briefly explain the two types of memory in microcontroller.

(2 marks)

(c) In microcontroller's serial communication, there are three protocols, UART, SPI, and I^2C which differ in their implementation, but ultimately serve the same purpose.

(i) Briefly explain the principle operation of the three protocols.

(1 mark)

(ii) Sketch the connection of Arduino UNO and two (2) MCP4231 SPI digital potentiometers. Let Arduino to be the master and the SPI devices to be slaves. Refer **Figure Q1(c)(ii)** for pin configuration of Arduino UNO and MCP4231.

(8 marks)

Q2 (a) Explain each of the instructions program below:

i. #include("Servo.h")
ii. void setup() {}
iii. void loop() {}
iv. pinMode(A1,OUTPUT);
v. int a = digitalRead(3);
vi digitalWrite(4,0);
vii. int a = analogRead(A2);
viii. analogWrite(9,127);
ix. unsigned long x = millis();
x. delay(1500);
xi. attachInterrupt(1,ISR,LOW);
xii. int state = LOW; state =! state;

(12 marks)

(b) Based on the circuit in **Figure Q2(b)** and the sample program below, fill in the correct results for the LED on each interrupt mode in the **Table Q2(b)**.

```
int LED = 13;
int state = HIGH;

void setup(){
     pinMode(LED,OUTPUT)
     attachInterrupt(0,ISR0, LOW  );
}
void loop(){
     digitalWrite(LED,state);
}
void ISR0(){
     state = !state;
}
```

Table Q2(b)

Interrupt Mode	Button Press	Button Release
LOW		
RISING		
FALLING		
CHANGE		

(8 marks)

Q3 LCD (Liquid Crystal Display) screen is an electronic display module that has a wide range of applications. Based on the circuit at **Figure Q3**,

(a) What is the size of the LCD?

(1 mark)

(b) What is the function of potentiometer RV1?

(1 mark)

(c) Based on the program below, show the results of the LCD output.

```
void loop()
{
      int i = 123;
      String s = "ABC";
      lcd.setCursor(0, 1);
      lcd.print(i);
      lcd.setCursor(1, 0);
      lcd.print(s);
}
```

(2 marks)

(d) Add a button with pullup resistor to the circuit and write down a full code to show on the LCD the word "BTN1 IS PRESS" when button is pressed and "BTN1 NOT PRESS" when button is not pressed.

(11 marks)

Q4 (a) List out three types of basic motor for microcontroller.

(3 marks)

(b) How many pins that the ATMEGA 328P can support PWM signals?

(1 mark)

(c) What is the single instruction of Arduino to generate 50% duty cycle of PWM signal to pin number 6?

(1 mark)

(d) Based on the **Figure Q4(d)**, what is the function of L239D?

(1 mark)

(e) Based on the **Figure Q4(d)**, write a full programming code which is Button 1 (BTN1) will rotate the motor clockwise and Button 2 (BTN2) anticlockwise.

(14 marks)

PART B

Q5 Design a ptototype of an Automatic Brightness Lightning system to control the brightness of a lamp (i.e. use an LED) in three condition of darkness. Use a Light Dependant Resistor (LDR) to measure the darkness on the environment. The requirements are as follow:

1. If the ADC value of the LDR is more than 700, turn OFF the LED.
2. If the ADC value of the LDR is between 700 to 400, turn ON the LED with 50% brightness.
3. If the ADC value of the LDR is less than 400, turn ON the LED with 100% brightness.

By referring to the above requirements,

(a) Illustrate your proposed system circuit diagram.

(10 marks)

(b) Develop a program based on the operation stated.

(15 marks)

Q6 Design a Fire Alarm system by using Atmega 328P microcontroller (i.e. Arduino UNO development board) to alert fire at home. Your system must be consists of an LM35 sensor to detect temperature, three LEDs for temperature level status and a buzzer for the alarm. The operation are as follow:

1. If temperature reading is less than 30°C, turn ON Green LED, while the other LEDs and buzzer turn OFF.
2. If temperature reading is equal or more than 30°C and less than 40°C, turn ON Yellow LED, while the other LEDs and buzzer turn OFF.
3. If temperature reading is equal or more than 40°C, blink Red LED with 0.5 second delay and the other LEDs turn OFF. At the same time, buzzer will turn ON and OFF with 0.5 second delay.

Note that the resolution of LM35 is 10mV/°C. By referring to the above requirements,

(a) Illustrate your proposed system circuit diagram.

(10 marks)

(b) Develop a program based on the operation stated.

(15 marks)

- END OF QUESTION -

FINAL EXAMINATION

SEMESTER/SESSION: SEM 2/2017/2018 PROGRAMME CODE: DAE
COURSE NAME : MICROCONTROLLER COURSE CODE: DAE 32203

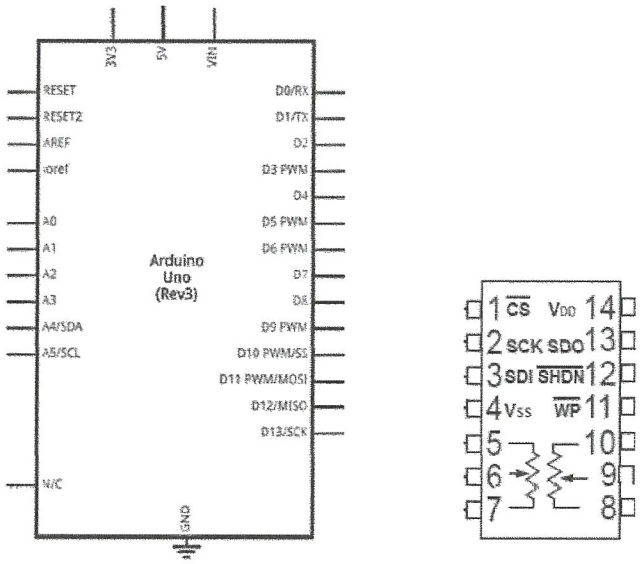

Arduino UNO MCP 4231

FIGURE Q1(c)(ii)

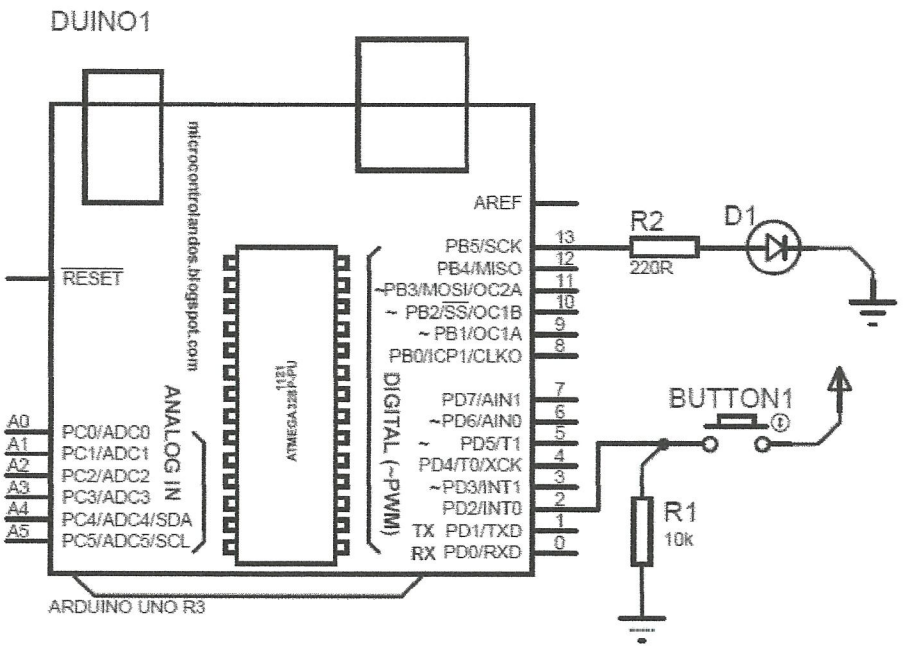

FIGURE Q2(b)

FINAL EXAMINATION

SEMESTER/SESSION: SEM 2/2017/2018 PROGRAMME CODE: DAE
COURSE NAME : MICROCONTROLLER COURSE CODE: DAE 32203

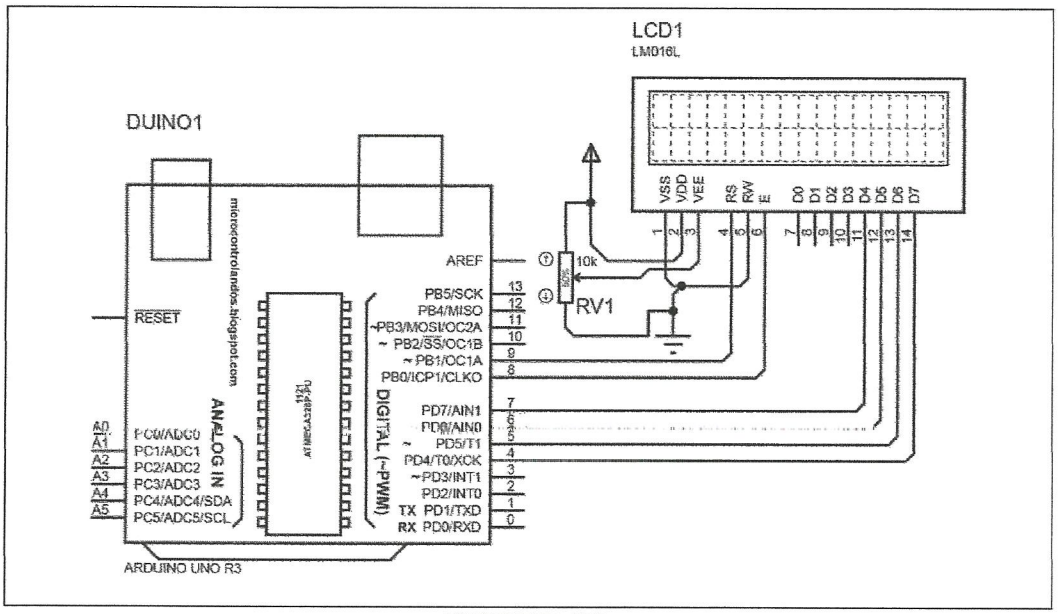

FIGURE Q3

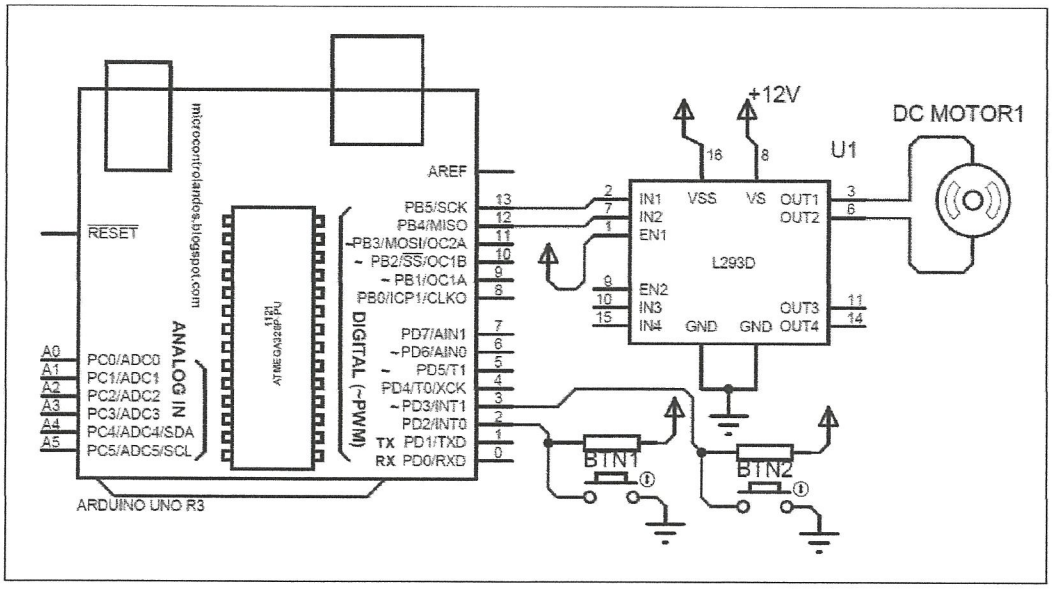

FIGURE Q4(d)